Cam-Slide®

Fetterolf Line Blinding System

SchuFlit

Safe, Fast, and Convenient

Blinding product lines connected to reactors, vessels or tanks is a business critical procedure in most chemical, petrochemical, tank storage, refinery or pharmaceutical plants.

Safe

Fast acting line blinds ensure the safety of personnel engaged in maintenance and operations. They provide 100% positive isolation and when used in tandem with isolation valves provide the highest level of plant and personnel safety.

Fast

The Cam-Set® and Cam-Slide® product range not only ensures safety, but enables blinding to be carried out in less than one minute – a time and productivity saving that pays back the initial cost in a short period of time.

Solid plate between flanges ½" to 12"

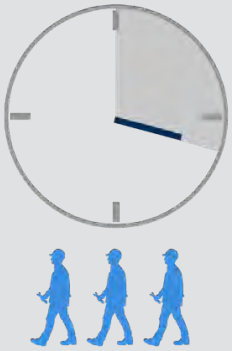

1 to 4 hours by 3 people

Cam-Set® / Cam-Slide® line blind ½" to 12"

30-60 seconds by 1 person

Convenient

The Cam-Set® and Cam-Slide® can be operated by one person, from one side of the blind without the need for special tools or lifting equipment. It is also beneficial in preventing product cross contamination.

Key Features

- 100% Positive Shut-Off
- No Spreading of Pipe Required
- Visible Position Indicator
- Fast, One-Person Operation
- Minimum Maintenance
- Available in CS, SST, and most Alloys

Product Choice

Fetterolf Corporation invented the first fast acting line blind (Cam-Set®) in 1979. Since then it has developed a portfolio of blinding products to meet almost any blinding requirement: Compact design for tight spaces, High Temperature, Non Drip, Fire Safe as well as sliding and swinging variants. We also offer customized solutions.

Standards and Certification

All SchuF Fetterolf Line Blinds are built to exacting quality and engineering standards. We follow the ASME Boiler and Pressure vessel code and API standards. We also conform to DIN, CRN, JIS, NACE, PED and US Navy standards as required.

Quality

Fetterolf Quality System is an ISO 9001:2015 and Lloyds Register Certified quality company.

Swinging Types

Cam-Set® - 81FC

Cam-Set® with Counterweight - 81FC-*

Cam-Set® with Strainer - 81FC-*

Stacey® Line Spreading Blind - 81FS

* to indicate model variant

Sliding Types

Cam-Slide® - 81CS

High Temperature Cam-Slide® - 81HS

Cam-Slide® with Rupture Disc - 81CS-*

Non Drip Cam-Slide® - 81NS

Cam-Slide®

Model 81CS

The Cam-Slide® is a sliding type line blind where the blinding plate travel is linear, compared to the swinging motion of the Cam-Set®. The Cam design allows for quick and smooth position changing. The Cam-Slide® features a multi-bolt design allowing for convenient operation with more compact face to face dimensions. The additional body bolts make this style ideal for higher pressure applications.

Adaptable Design

The rectangular body of the Cam-Slide® along with the linear plate movement make the design more adaptable for different variations. Apart from its standard design the Cam-Slide® also comes in High Temperature, Fire Safe & Non Drip configurations. For installations with very little space available, a compact version can be supplied.

Easy Seal Inspection

The seals are in the spectacle plate in this design. This feature is beneficial by providing easy access for inspection and seal replacement. Checking the condition of these seals may be done outside of the process before changing the position in order to ensure a good quality seal.

Features

- 100 % Positive Isolation
- NO Line Spreading Required
- Multi-bolt Design
- Quick Plate Movement
- Positive Positioning
- Seals in Spectacle Plate
- Adaptable Design

Standard Specifications

Size	1” - 60” (DN 25 to DN 1500)
Pressure Class	ASME Class 150 - 2500 (PN2.5 to PN400)
Material	Carbon Steel, Stainless Steel, Hastelloy®, and Titanium
Actuation	Manual, Pnuematic Hydraulic and Electric

Fast, Easy, & Efficient

Standard Cam-Slide® Cutout

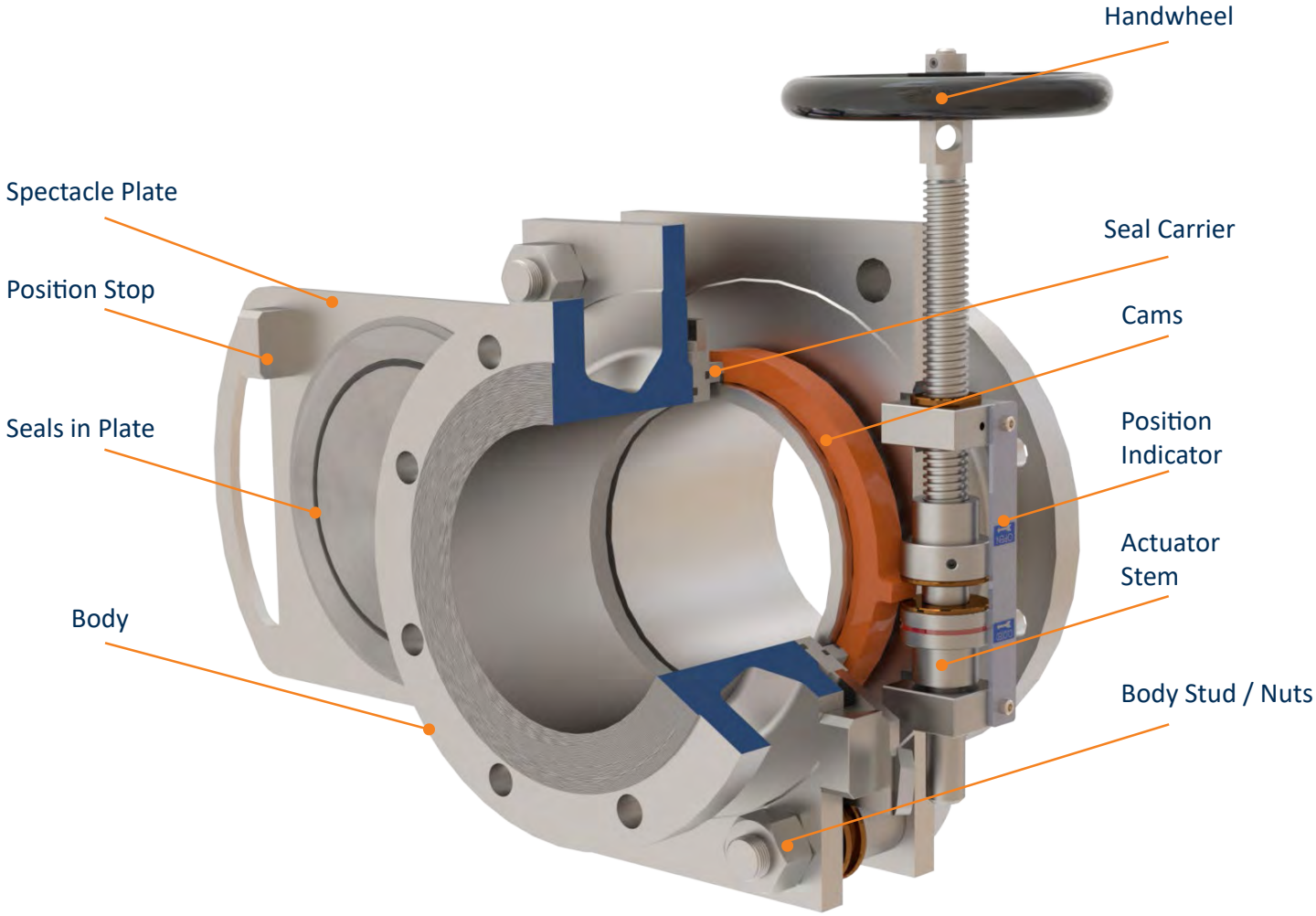

Part Description	Material
Body	Carbon Steel or Stainless Steel
Spectacle Plate	Stainless Steel
Seal Carrier	Stainless Steel
Cams	Stainless Steel
Actuation Stem	Carbon Steel
Body Studs	A193-B7 or A193-B8
Nuts	A194-2H or A194-8
Seals	FKM (Viton), FFKM, EPDM, Buna-N, NBR, PTFE etc

Other materials and seal rings are available upon request

Options

- Hand Wheel Extensions
- Locking Device
- Limit Switches
- Drain/Vent ports
- Spectacle Plate Covers to Protect Seals
- Compact Design (integral tapped end flange)
- Rain/Dust Shield
- Torque Limiter

Operation of Standard Cam-Slide®

Depressurize and drain line before use

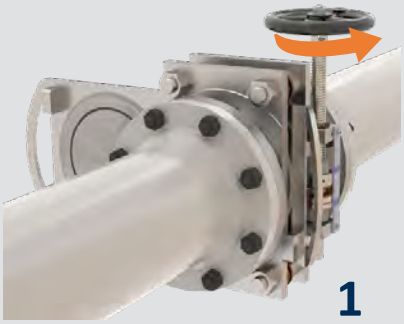

Turn hand wheel counterclockwise to unclamp spectacle plate. Indicator will be in unclamped position (below)

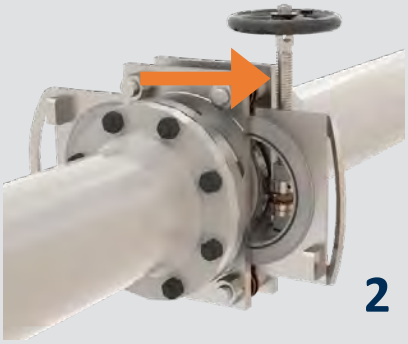

Slide spectacle plate from thru to blinded position

Turn hand wheel clockwise to clamp spectacle plate and seal line blind. Indicator will be in clamped position (below)

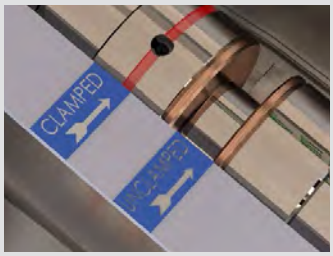

Cam Mechanism Principle

The Cam product line consists of line blinds that **DO NOT require spreading** of the pipeline in order to change spectacle plate position. A special cam mechanism enables this. The cams are made from two separate components with inclined planes, one stationary and one rotating. The rotating cam has an arm attached which, once engaged by turning the handwheel and stem, moves the two cams apart or together as required. This creates sufficient space for the spectacle plate to move or be locked in place.

Cam Unclamped

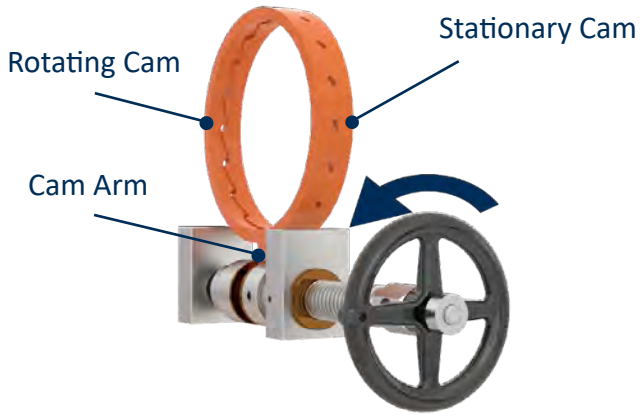

Cam Clamped

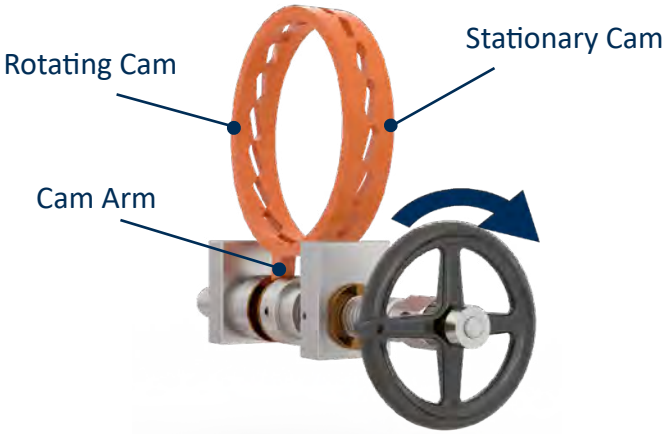

Fire Safe Cam-Slide®

Fire safe designs are often a mandatory requirement in the oil, gas, chemical, and petrochemical industries. These designs are meant to limit the amount of potential damage done in the event of a fire. For critical medium or enhanced fire security an internal bellows can be added to eliminate internal seals. Standards such as API 607 exist to ensure designs meet these stringent leakage amounts.

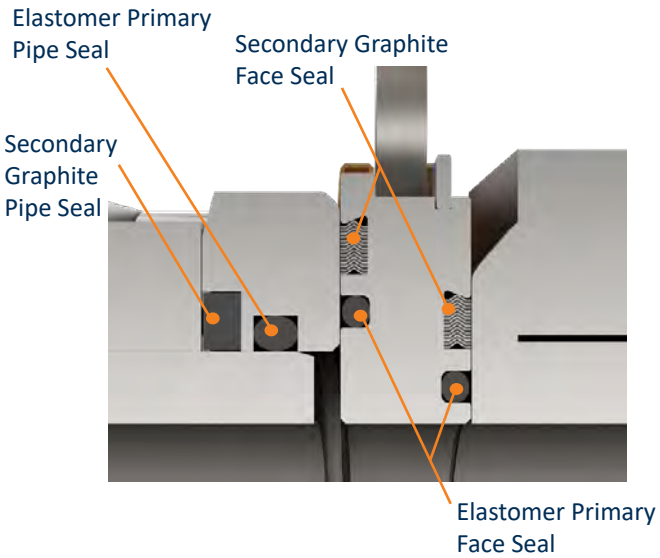

Fire Safe Dual Seal Design

The fire safe design functions in exactly the same way as the standard Cam-Slide®. It can be operated in less than 30 seconds by one person without any special tools.

Seals consist of elastomer primary seals as well as flexible graphite or spiral wound gasket backup seals. The elastomer primary seals ensure sealing during normal operation. The graphite backup seals are in place to seal the line blind in the event of a fire which may melt the elastomer primary seals.

Fire Safe Options

Dual Sealing

- Standard design equipped with elastomers for primary sealing with backup graphite seal rings for the face seals as well as the internal pipe seal.

Bellows

- Additional bellows and modified cam to eliminate internal seals.

Safe, Fast, & Convenient

Non Drip Cam-Slide®
Model 81NS

Fast, Safe, & Clean

Direction Indicator for open/closed (thru/blind)

Position Indicator for clamped/unclamped

Description

The Non Drip Cam-Slide® is the ideal blinding solution where pollution is strictly prohibited.

This is achieved by either adding an enclosure underneath the body of the line blind (Non Drip Cam-Slide®) or by enclosing the sides of the blind body (in the Half or Full Plate Design).

Key Features

- No drips during blinding process
- Reduced face to face dimensions
- Vertical plate movement reduces space required between pipelines
- 3 Designs to choose from
- Absolute positive shutoff

Actuated Non Drip Cam-Slide®

Both clamping and unclamping and plate travel are enabled by the actuator assisted hand wheels. In the left picture the stem has been extended so that the line blind can be operated from above on a platform or walkway. The vertical plate movement design is also useful where space is limited – e.g. parallel pipelines in close proximity, or where the face to face dimensions must be reduced.

Space Saving Non Drip Designs

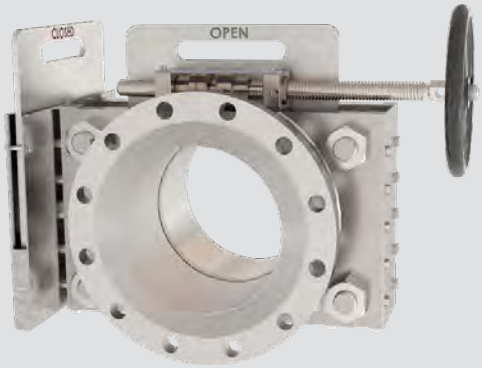

Half Plate Non Drip Cam-Slide®

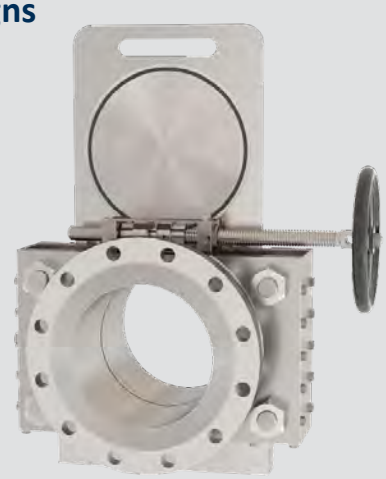

Full Plate Non Drip Cam-Slide®

High Temperature Cam-Slide®
Model 81HS

The High Temperature Cam-Slide® is a fast acting line blind designed to withstand critical service applications with temperatures up to 1500°F (815°C) in non-oxidizing environments. This design includes a bellows, spiral wound gaskets or engineered graphite seal rings. No line spreading is required, and the seals can be replaced quickly and conveniently. The body and internal moving parts are reinforced to account for temperature related creep stress, metal fatigue and deflection.

Finite Element Analysis for stress and deflection on body

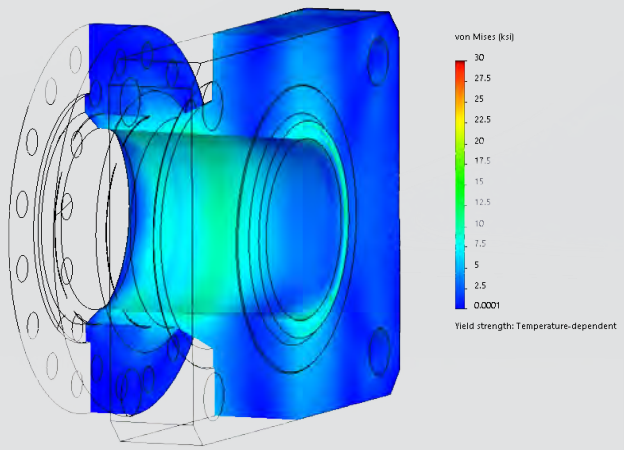

Load Modeling for Safety

At very high temperatures (between 600°C and 815°C) different gasket types require a much higher level of force to achieve compression. This force can lead to metal stress or deflection. Finite Element Analysis and wall calculations are run to size the components. These calculations are based on the process conditions while also accounting for factors such as stress, thermal expansion, and seal loading.

Safe, Fast, & Dependable

Features

- **100%** Positive Isolation
- Special HT Materials
- **NO** Line Spreading Required
- Quick Plate Movement
- Reinforced Body and Cams
- Easy Seal Replacement

Benefits

- Man Safe
- Temperature Resistant
- Fast Operation
- Dependable
- Convenient
- Cost Efficient

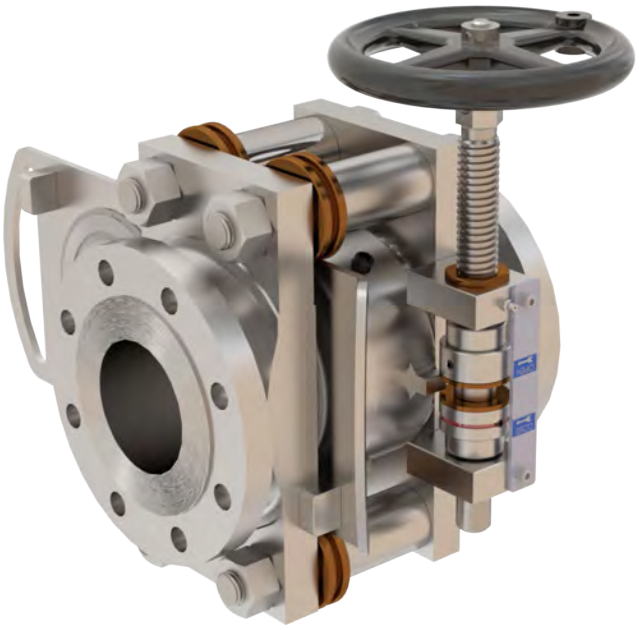

Technical Specifications

Nominal Diameters
½" (DN15) to 24" (DN600)

Temperature Range
-20°C to 816°C (14°F - 1500°F)

Pressure Rating
ASME Class 150 to 600 or higher on request
- Special Ratings and end flanges available on request

Actuation Method
Manual, Pnuematic, Hydraulic, Electric

Materials
- Body: HT Carbon or Stainless Steel
- Plate: Stainless Steel
- Bellows: Stainless Steel

* Alternative materials may be required

Custom Designs

With over 50 years of line blind design and manufacturing experience, Fetterolf has a dedicated team that can work on customized designs to enable special face to face dimensions or new uses for the Cam-Slide®. Additional functions include time consuming tasks such as changing a rupture disc, strainer, or even an orifice plate (illustrated below). Given its adaptable design, the Cam-Slide® has an infinite number of variations and possibilities.

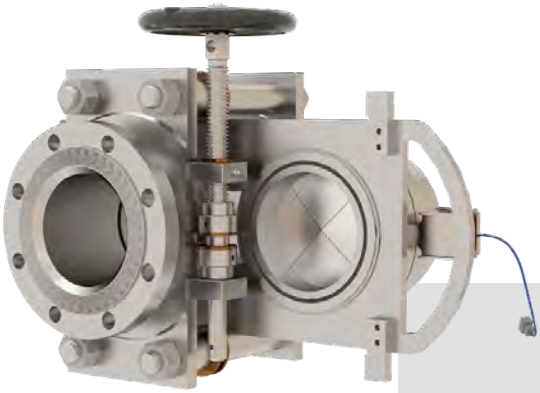

Cam-Slide® with Rupture Disc

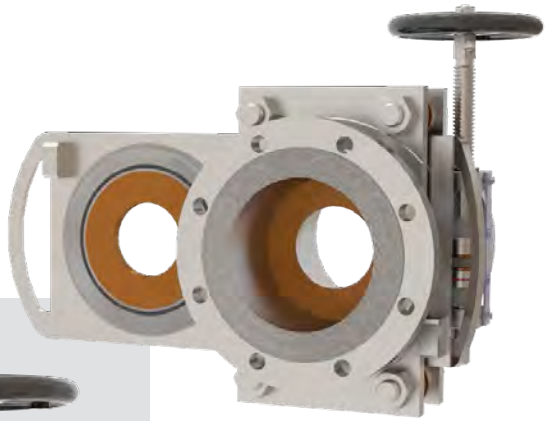

Cam-Slide® with Orifice Plate

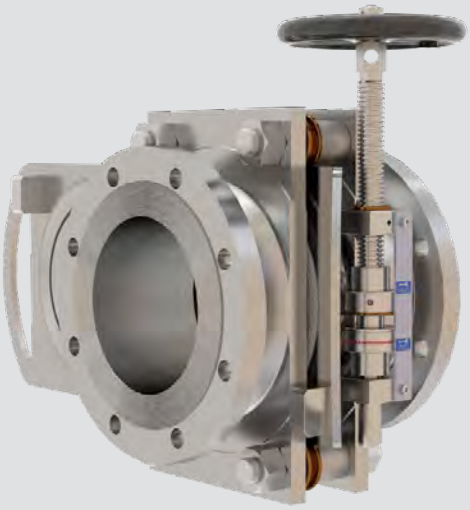

Standard Cam-Slide®

Compact Cam-Slide®
(integral tapped end flange)

Cam-Slide® with Strainer

Common Installation Orientations

The recommended installation for horizontal pipelines. The spectacle plate rests on a set of guide rollers for smooth horizontal plate movement

A vertically actuated plate may be preferred where space is limited on either side of the pipeline. An actuator with handwheel can be provided for easy vertical actuation of the spectacle plate.

Guide rollers and spacers center the plate and allow smooth plate movement when installed in vertical pipelines. The seal side body should always be on the top side in this configuration.

Options

As a valve and safety device, the Cam-Slide® has a large variety of options that can be added. The most common are listed below. In addition to these, the Cam-Slide® can be made in almost any material, including Hastelloy®, Titanium, and most alloys. Cam-Slides® can be jacketed or have special coatings for offshore or other severe service applications. The most common options are shown below.

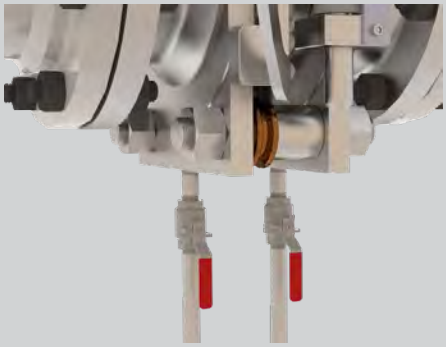

Drain / Vent Ports

Drain ports (with valve) or vents can be added on one or both sides to drain the line blind and/or line prior to switching, to minimize potential spills.

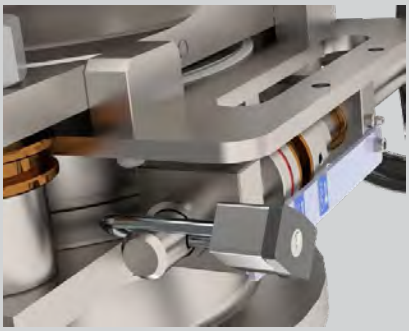

Lockout Device

The line blind can be locked to avoid unauthorized use. Simple locking or more complex inter-locking systems can be provided.

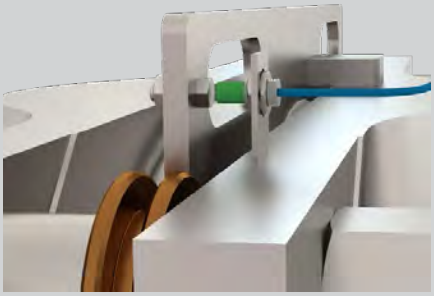

Limit Switches

Actuated line blinds can be supplied with limit switches for open & closed and/or clamped & unclamped positions.

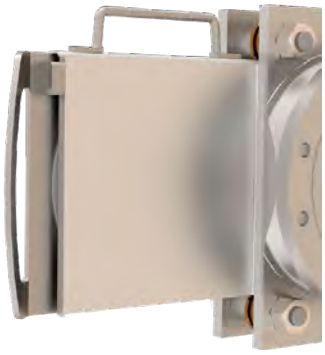

Plate Covers

Different types of plate covers are available to protect the spectacle plate and o-ring in harsh operating environments.

Torque Limiter

For applications that require an exact torque value to open or close, a torque limiter can be supplied.

Roller Plates

For larger blinds in a vertical pipeline, a roller plate can be provided to support the plate and ensure smooth travel.

Standard Cam-Slide® Dimension Table

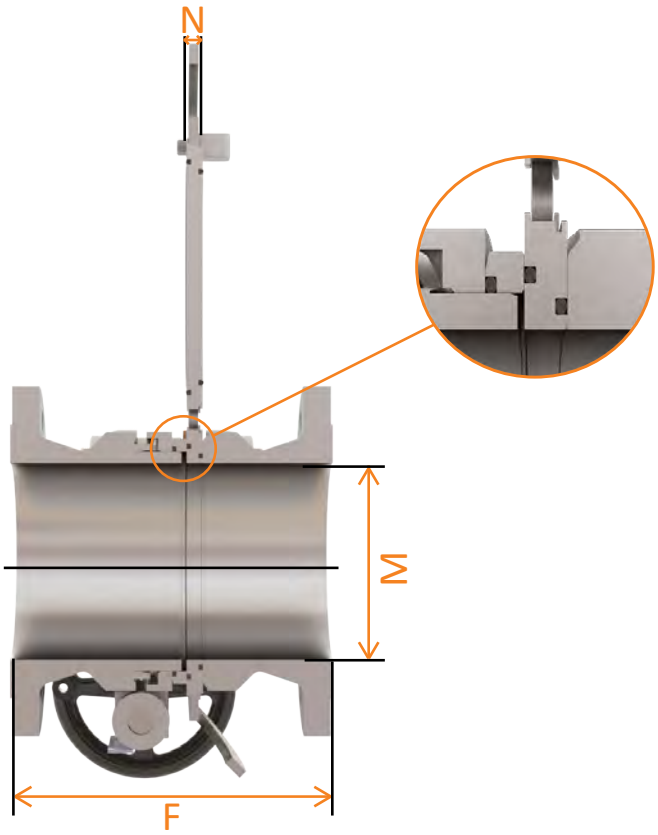

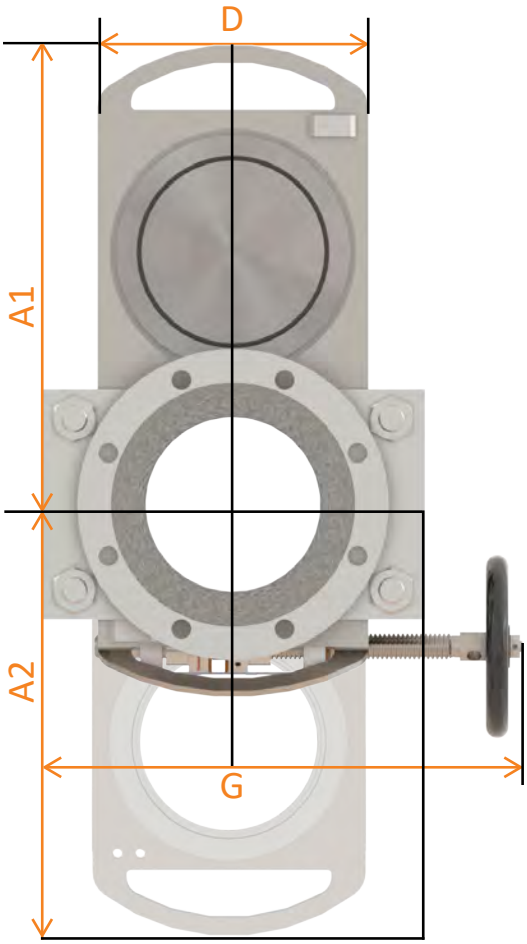

CAM-SLIDE® LINE BLIND DIMENSION TABLE (ASME 150#) in mm									
SIZE (ASME)	SIZE (DIN)	A1	A2	D	F	G	M	N	~ Weight Kg/Lbs
1"	DN 25	134	114	93	178 [7.00"]	284	1" SCH. 80	13	12/27
1-1/2"	DN 40	166	138	104	190 [7.50"]	311	1-1/2" SCH. 80	13	16/35
2"	DN 50	197	162	115	203 [8.00"]	337	2" SCH. 80	13	19/42
3"	DN 80	263	251	170	222 [8.75"]	368	3" SCH. 80	13	35/77
4"	DN 100	335	322	200	248 [9.75"]	458	4" SCH. 80	13	56/123
6"	DN 150	440	420	255	292 [11.50"]	493	6" SCH. 80	16	97/214
8"	DN 200	510	497	300	317.5 [12.50"]	573	8" SCH. 80	16	115/254
10"	DN 250	610	590	345	356 [14.00"]	625	10" SCH. 60	16	190/419
12"	DN 300	725	702	410	356 [14.00"]	750	12" SCH. 80S	23	270/595
14"	DN 350	778	761	470	406 [16.00"]	816	14" SCH. 80	23	420/926
16"	DN 400	783	761	486	432 [17.00"]	931	16" SCH. 60	23	496/1093
18"	DN 450	878	861	536	446 [17.56"]	1175	18" SCH. 60	26	635/1391
20"	DN 500	894	894	625	711 [28.00"]	1250	20" SCH. 60	26	1208/2663
24"	DN 600	1073	1073	750	838 [33.00"]	1500	24" SCH. 60	32	1450/3197

For other dimension tables and product lines, please contact your sales agent

Typical Combinations

Below are examples of combinations of Cam-Slides® with various isolation valves provided by SchuF Fetterolf or third party providers.

Integral combinations with SchuF Valves

Cam-Slide® with integrated lift plug valve

Cam-Slide® with drain valve

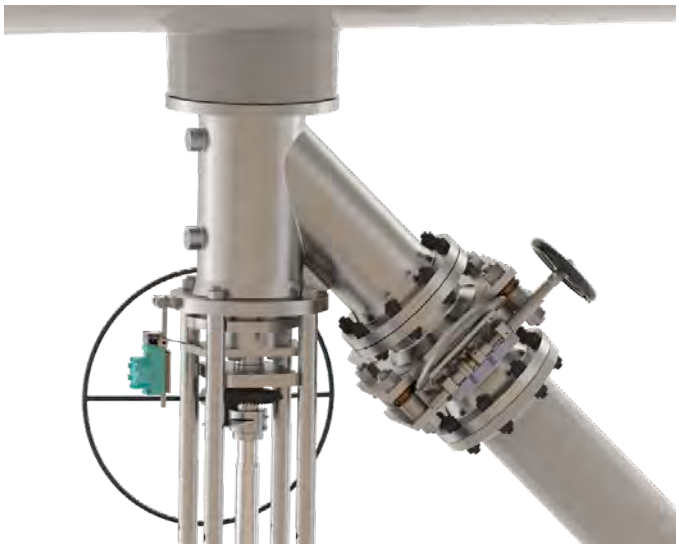

Combinations with SchuF or 3rd Party Valves

Cam-Slide® with ball valve

Cam-Slide® with knife gate valve

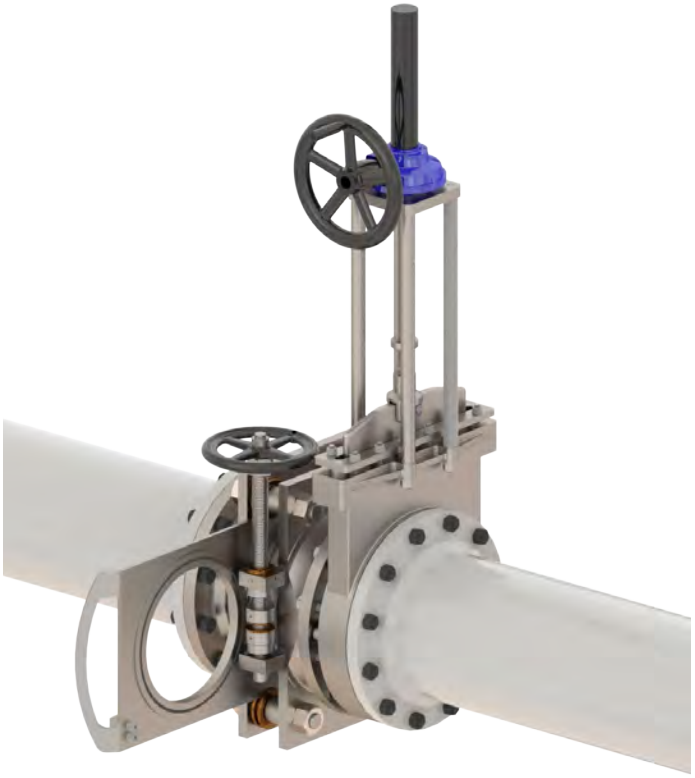

Advantages

- Reduced face to face
- Multiple options available
- Best in class valve combinations

Engineering Standards, Design Verification, and Certification

All line blinds are designed, constructed and tested per the latest standards. We operate under an ISO 9001:2015 quality system to ensure all products are designed and manufactured to the highest quality.

The Cam-Slide® incorporates many material and construction safety features. They are built to meet or exceed ASME B16.5 standards. The thickness of the Cam-Slide® spectacle plate is equal to or greater than that required by API 590 (ASME B16.48).

Engineering Standards

ASME Standard	Description
B16.34	Valves- Flanged, Threaded & Welding End
B16.48	Steel Line Blanks for Refining
B16.5	Pipe Flanges & Valve Fittings
B31.1	Power Piping
B31.3	Process Piping

ASME Standard	Description
ASTM F1020-86	Line Blind Valves for Marine Applications

ASME B & PV Code	Description (Boiler & Pressure Vessel Code)
Section II	Material
Section VIII	Rules for Construction of Pressure Vessels
Section IX	Welding and Brazing Qualifications

API Standard	Description
API 598	Valve Inspection and Testing
API 607	Fire Test Requirements

Others	Description
ISO 9001	Quality Management System
NACE MR0175	Sulfide Stress Cracking and Stress Corrosion

The bolting tensile area of the Cam-Slide® is also equal to or greater than the bolting tensile area used in the flanges.

All of the body bolts are tack welded so that they cannot be inadvertently removed or loosened. The Fetterolf Cam-Slide® is easy to operate and safe - by design.

Certification
In addition to our ISO 9001 certification, Fetterolf is also certified to Lloyd's Register [for offshore applications], API for firesafe, PED, TRCU, and can design to any internationally recognized standard.

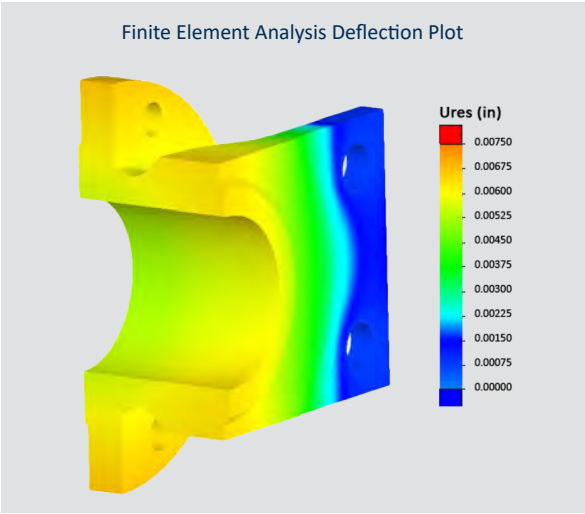

Calculations and finite element analysis are done in order to make sure the line blind is designed according to the operating conditions.

Each line blind is hydro tested before it leaves the factory in order to verify the design and achieve 100% positive isolation.

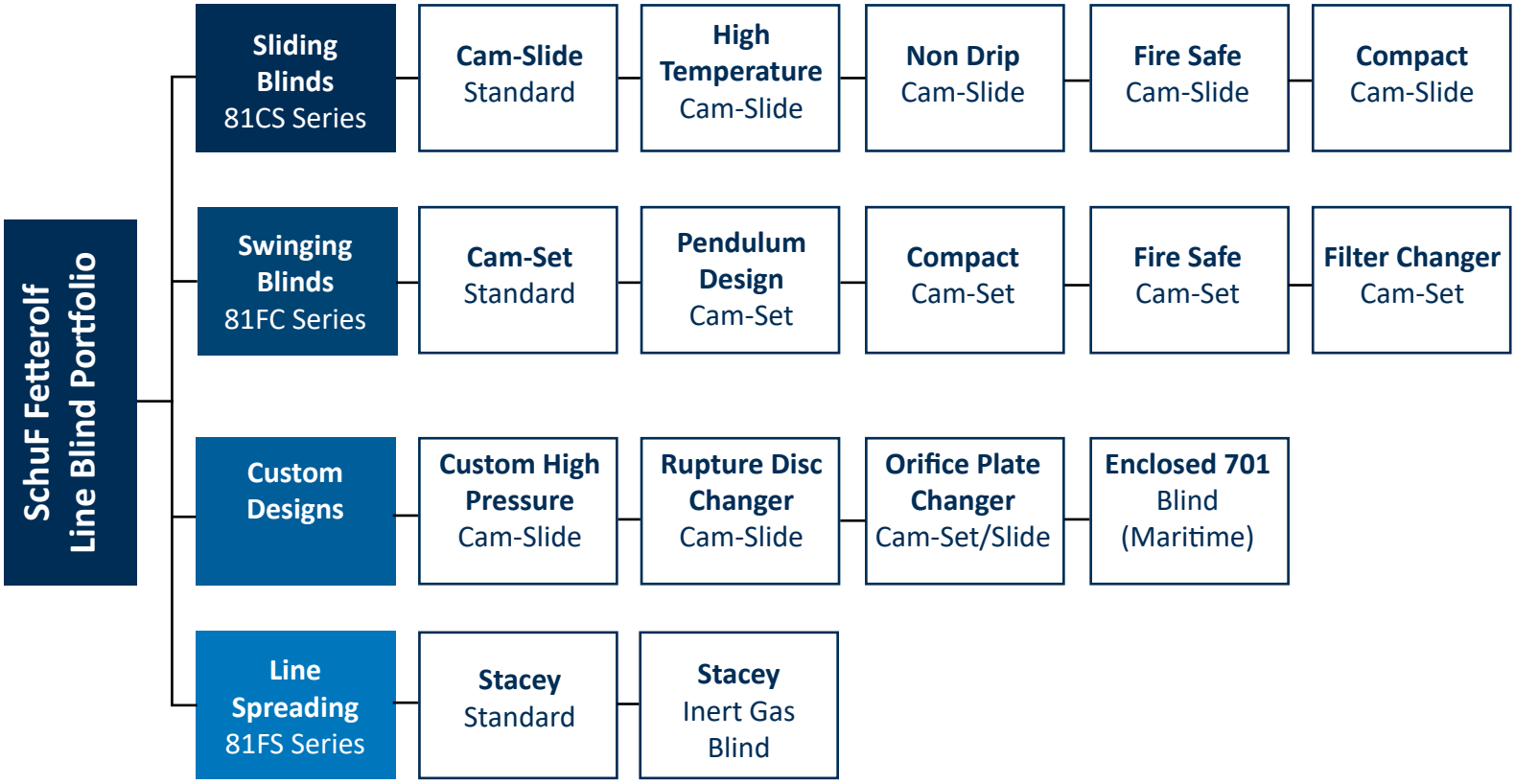

Fetterolf Line Blind Customer List

Chemical & Petrochemical

Akzo Nobel
BASF
Bayer
Braschem
Celanese
Chevron Phillips
Dow Chemical
DuPont
Eastman
Formosa Plastics
Henkel
Ineos
Kemya
LG Chemical
Lubrizol
Mexichem
Momentive
Mitsubishi Poly-silicone
Nova Chemicals
OXY Vinyl
Petronas
Sabic
Solvay
Tianye PVC

Steel & Minerals

Arcelor Mittal
AK Steel
Alcoa
Bhushan Steel
BHP nIckel
Corus Steel
Essar Steel
Hindalco Industries
Rio Tinto
Saarstahl AG
Tronox
Tata Steel
Thyssen Krupp
US Steel

Oil, Gas & Refinery

BP
BOC
Cenovus Energy
CNRL
Emerates Gas
Exxon
ENOC
Gas de France
Lukoil
Linde Gas
Methanex
Phillips 66
Puma Energy
GATX Terminals
Oil Tanking
Petrobras
PDVSA
Shell
Petronor
Tenova Core
Turkish Petroleum
Tupras Refinery

Offshore & Shipping

BP Exploration
Crowley Maritime
General Dynamics
Hyundai Ship Building
Keppel Marine
Langset Terminal
Northrop- Grumman
Modec Offshore
Pemex
Jurong Port
Sea River Maritime
Sembawang Shipyard
Solar Turbines
Texaco Oil & Marine
Thai Tank Terminal
US Navy
VT Halter Marine
Vopak
Wallen Ship

Pharmaceutical

Eli Lily
Johnson Matthey
Merck
Pfizer
Rhone Poulenc
Sandoz
Zeneca

Commercial

Absolut Vodka
Dow Agrosciences
Evonik
Flint Hills
General Electric
Monsanto
Nestle
Proctor & Gamble

Cam-Set & Cam-Slide Valve Enquiry Form

Contact information	Contact name:	
	Company:	
	Country:	
	E-mail address:	
	Telephone number:	
Process details	Medium:	
	Operating Temperature:	
	Operating Pressure:	
	Other, please specify:	

Description Please select which model you prefer	Standard Cam-Set & Cam-Slide Models Description				Please specify if models A to M do not meet your requirement
	☐ **Model A -** Carbon steel	☐ **Model B -** Stainless steel wetted parts	☐ **Model C** - Stainless steel	☐ **Model M** - Maritime	
Body (triangle)	Carbon steel	Carbon steel	Stainless steel	Carbon steel	
Body pipe	Carbon steel	Stainless steel			
Seal carrier	Stainless steel				
Spectacle plate	Stainless steel				
Bolting	Carbon steel			Stainless steel	
Stem	Carbon steel	Carbon steel	Carbon steel	Monel	
Seals	Viton				
Actuation	Hex nut			Bronze hand wheel	

Please answer the questions in sections 1 to 5 below (6 is optional)

1. Valve Type	Please select a type of valve below: ☐ Cam-Set ☐ Cam-Slide ☐ Non-Drip ☐ High Temp	
2. Size	Please choose a size between (DN 10-15) **1/2"** and (DN 1500) **60"**	
3. Pressure class	Please enter the pressure class required for the Line Blind (typically ASME **150#, 300#, or 600#**) or PN Value (**PN10, PN16, or PN40**)	
4. Connections	Please select the connection type that you would prefer: ☐ Flanged ☐ Butt-Weld	
5. Orientation	Please specify the orientation of the pipeline as Horizontal **(H)** or Vertical **(V)**	

		Please specify
6. Options	**Actuation Options -** ☐ **Hand Wheel** ☐ **Pneumatic** ☐ **Hydraulic** ☐ **Hex Nut**	
	Seals in spectacle plate - ☐ **Yes** or ☐ **No**	
	Counterweight (recommended over 12" horizontal pipeline for *cam-set design only*) ☐ **Yes** or ☐ **No**	
	Roller support for spectacle plate (Vertical pipeline) - ☐ **Yes** or ☐ **No**	
	Locking device - ☐ **Yes** or ☐ **No**	
	Dust cover(s) - ☐ **Yes** or ☐ **No**	
	Alternative sealing rings (Teflon, Nordel, PTFE; Graphite, spiral wound gasket, etc.)	
	Special coatings - please specify (e.g. Epoxy, Sermetel etc.)	
	Connections Required - ☐ **Drain** ☐ **Purge** ☐ **Sampling**	

6. Comments

Notes:

Please provide as much information as possible on this form. If any point is unclear, please leave blank. If you prefer to talk to us via the phone please contact us on the telephone number below, or contact our local representative.

The above form is intended to help describe the options available for the Cam-Set. SchuF Fetterolf also provides customised line blind system designs to meet severe conditions, high temperatures, and pressure classes to ASME 2500#. If you are interested in these products please contact us by e-mail. Thank you.

Telephone Numbers
Fett: +1 610-584-1500
SchuF: +49 6198 571200

2021 Cressman Road
Skippack, PA 19474
United States of America

e-mail: sales@fetterolfvalves.com
e-mail: sales@schuf.de
Web: www.fastblindvalves.com

SchuF FETTEROLF Worldwide

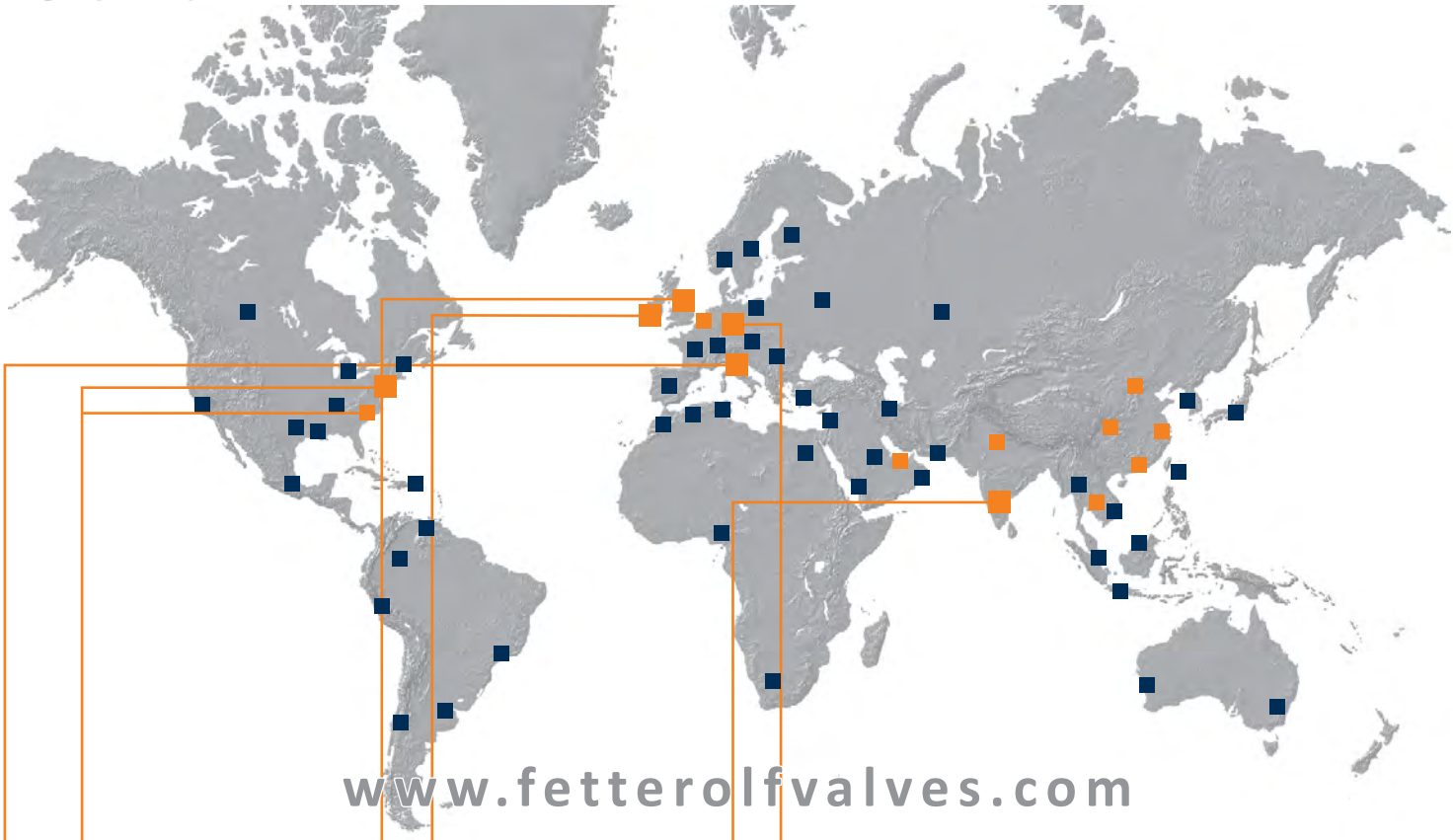

www.fetterolfvalves.com

www.fastblindvalves.com • www.schuf.com

USA

Fetterolf Corporation
phone: +1 610 584-1500
info@fetterolfvalves.com

USA Sales Channel

SchuF (USA) Inc.
phone: +1 843 881 3345
sales@schuf.us

IRELAND

SchuF Valve Technology GmbH
phone: +353 21 4837000
sales@schuf.ie

GERMANY

SchuF-Armaturen und Apparatebau GmbH
phone: +49 6198 571 100
sales@schuf.com

Your Sales Channel:

SchuF Benelux B.V.
phone +31 25 12 34 448
rklink@schuf.com

SchuF Middle East F.Z.C.
phone: +971 586 620 873
ecalnan@schuf.com

SchuF South East Asia Pte. Ltd.
phone +31 620 62 66 64
mmulder@schuf.com

SchuF Valves China Ltd.
phone +86 27 83 316 569
schufchina@schuf.com

ITALY

La Tecnovalvo S.r.l.
phone: +39 023503508
info@latecnovalvo.com

UNITED KINGDOM

SchuF (UK) Ltd.
phone: +44 203 355 2012
sales@schuf.ie

INDIA

SchuF Speciality Valves India Pvt. Ltd.
phone: +91 422 6164 600
+91 422 6164 628
sales@schuf-india.com

Your Local Agent: